ADDITIVE FEEDFORWARD CONTROL OF A KILN USING NEURAL NETWORKS

FERNANDO MORGADO DIAS[1], ALEXANDRE MANUEL MOTA[2]

[1]Escola Superior de Tecnologia de Setúbal do Instituto Politécnico de Setúbal,
Departamento de Engenharia Electrotécnica,Campus do IPS, Estefanilha,
2914-508 Setúbal, Portugal
Tel: +351 65 790000, Fax:+351 65 721869, Email: fdias@est.ips.pt
[2]Departamento de Electrónica e Telecomunicações, Universidade de Aveiro,
3810 Aveiro, Portugal
Tel: +351 34 370383, Fax:+351 34 381128, Email: alex@det.ua.pt

Abstract: This paper presents an application of Neural Networks to the control of a real system with measurement noise. The details of the system and the implementation of sensor, controller and actuator are described. Saturation in the actuator is present and dealt with. The results of controlling the kiln with Direct Inverse Control and Additive Feedforward strategies are presented and compared. Problems arising within noisy systems and differences comparing with noise free systems are discussed. The results achieved show that the Additive Feedforward Control strategy with a non-optimized PI Controller perform better than the Direct Inverse Control.

Keywords: Neural Networks, Additive Feedforward Control, Modeling, Direct Inverse Control, Measurement Noise.

1. INTRODUCTION

The present paper describes the modeling and control of a reduced scale prototype kiln under measurement noise. The work described in this article is still under development and is part of an interdepartmental project at the University of Aveiro, which will lead to the control of the atmosphere inside the kiln using two loops for temperature control, and for air/oxygen ratio control.

In section 2 the kiln and the complete system are described allowing the reader to have an understanding of the problems that will be detailed in later sections. Section 3 reports the problems and options made during the identification phase. Section 4 focuses on the control structures that were used in this work, pointing out their characteristics. Section 5 is about saturation in the actuator and how to deal with it. Section 6 reports the results achieved with the two control strategies that were used and compares them. At last section 7 contains the conclusion of the presented work.

2. THE KILN

The system is composed of a kiln, electronics for signal conditioning, power electronics module, cooling system and a Data Logger from Hewlett Packard HP34970A to interface with a Personal Computer (PC).

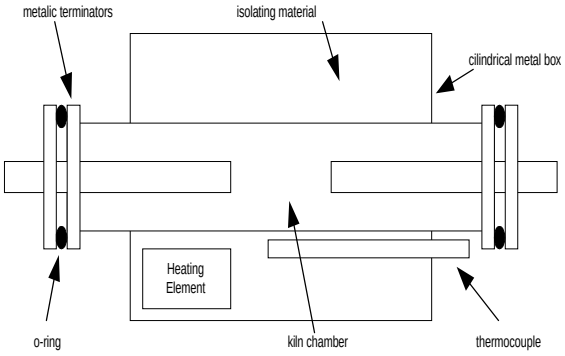

Fig. 1. Schematic view of the kiln.

Details about the kiln can be seen in figure 1 and the connections between the modules can be seen in figure 2.

The kiln is a cylindrical metal box of steal which is completely closed, filled with an isolating material up to the kiln chamber. The kiln chamber is limited by the metallic terminators and o-rings.

Inside the chamber there is an oxygen pump and an oxygen sensor that will be used for the second loop mentioned above.

The heating element is an electrical resistor that is driven by the power module.

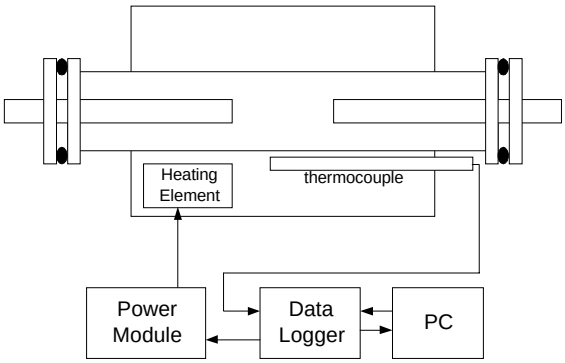

Fig. 2. Block diagram of the system.

The Data Logger acts as an interface to the PC where the controller is implemented using MATLAB. Through the Data Logger bi-directional information is passed: control signal in real-time supplied by the controller and temperature data for the controller. The temperature data is obtained using a thermocouple.

The power module receives a voltage signal from the controller implemented in the PC, which ranges from 0 to 4.095V and converts this signal in a power signal ranging from 0 to 220V.

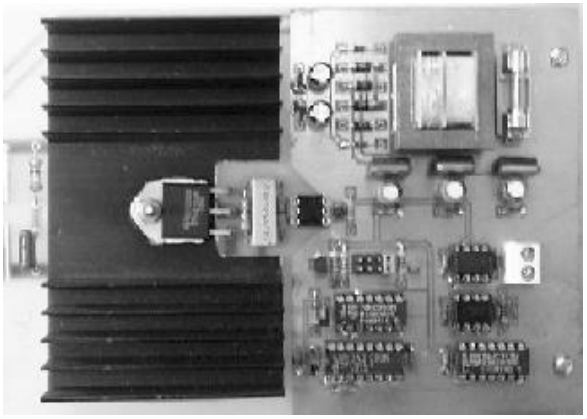

Fig. 3. Picture of the power module.

The signal conversion is implemented using a sawtooth wave generated by a set of three modules: zero-crossing detector, binary 8 bit counter and D/A converter. The sawtooth signal is then compared with the input signal generating a PWM type signal.

The PWM signal is applied to a power amplifier stage that produces the output signal. The signal used to heat the kiln produced this way is not continuos, but since the kiln has integrator behavior this does not affect the functioning.

The actual implementation of this module can be seen in figure 3 and a block diagram of the power module processing can be seen in figure 4.

Operating range of the kiln under normal conditions is between 750ºC and 1000ºC. A picture of the kiln and electronics can be seen in figure 5.

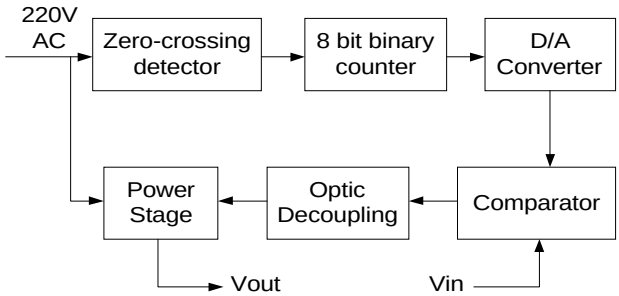

Fig. 4. Block diagram of the power module.

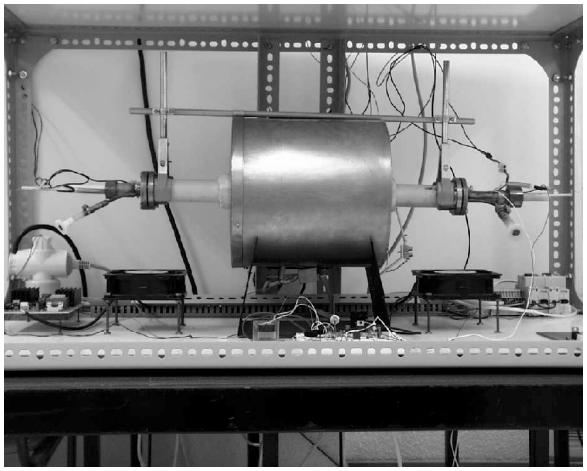

Fig. 5. Picture of the kiln and electronics.

3. IDENTIFICATION

Two problems arise as the first data is collected: the data logger limits the measured temperature to values superior to 300ºC (due to the characteristics of the thermocouple) and the thermocouple introduces measurement noise.

Considering that the kiln's behavior is nonlinear, the data contains noise and the lack of data up to 300ºC, Neural Networks (NNs) were considered to be an interesting approach to control the temperature.

Identification data was chosen so that two main requisites were met: frequency and amplitude spectrum wide enough [10]. With this concern and with a sampling period that was fixed to 30s after some trial-and-error tests, the operation of collecting data was successful.

Because of the measurement noise all the data was filtered using a simple first order filter with multiple iterations. Care was taken to avoid phase distortion and to choose appropriate cut-off frequency.

Using the data collected and divided into training and test sets, Direct and inverse models were identified using Feedforward Neural Networks (FNNs) and Auto-Regressive with eXogenous input (ARX) architectures. Training was performed off-line.

Training structures used for direct and inverse models are depicted in figures 6 and 7. These structures and specialized training are the most common solutions for training NN models and are described in several articles like in [2] and [4].

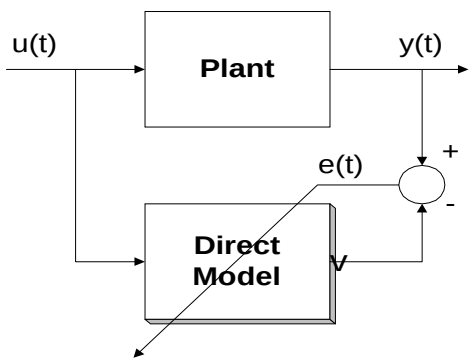

Fig. 6. Structure for direct model training.

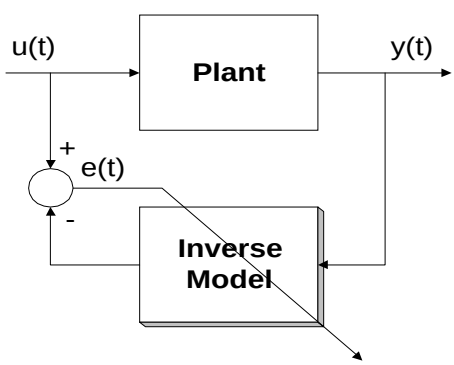

Fig. 7. Structure for inverse model training.

Levenberg-Marquardt algorithm was used for training because of its fastest convergence. Different architectures regarding the hidden layer were tested and the best results were obtained using four neurons on the hidden layer of the direct model and five neurons on the inverse model. Both models have a linear output neuron.

One common problem that arises during training is overtraining or overfitting. This corresponds to having the FNN modeling not only the features of the system but to an undesirable extent also the noise [5].

The overtraining problem has been an open topic for discussion motivating the proposal of several techniques like Regularization [7], Early stopping [9] and pruning - Optimal Brain Damage [3] and Optimal Brain Surgeon [1]. In the present work both models were trained using early stopping.

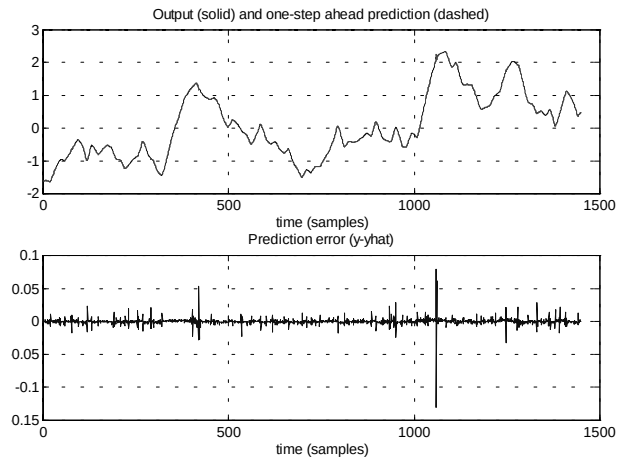

Fig. 8. Direct model answer to test set.

As can be seen in figures 8 and 9, the quality of the models is acceptable but not comparable to what can be obtained using noise free data.

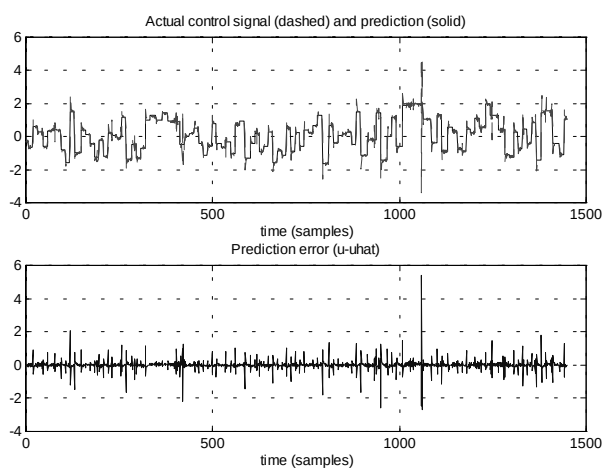

Fig. 9. Inverse model answer to test set.

The quality of the inverse model is inferior to the direct model. This is mainly because of the use of filtering, which in some situations diminishes the connection between input and output signal. This situation is more severe to the inverse model since to the direct model the kiln itself acts as a low pass filter.

The error is small, except for some “glitches” that appear in situations where the filtering makes it difficult for the models to “understand” the relation between input and output. With this procedure a detuned model is obtained. This detuned model is better than the model obtained directly from the noisy data.

During the identification and control tasks the NNSYSID [5] and NNCTRL [6] toolboxes for **MATLAB** were used.

4. CONTROL STRUCTURES

Many control structures concerning the use of FNN have been presented in the literature but in the aim of this article only two will be presented: Direct Inverse Control and Additive Feedforward Control.

Direct Inverse Control (DIC). Direct inverse control is the simplest solution for control that consists of connecting in series the inverse model and the plant as can be seen in figure 10. If the inverse model is of good quality, the output will follow the reference with only a delay.

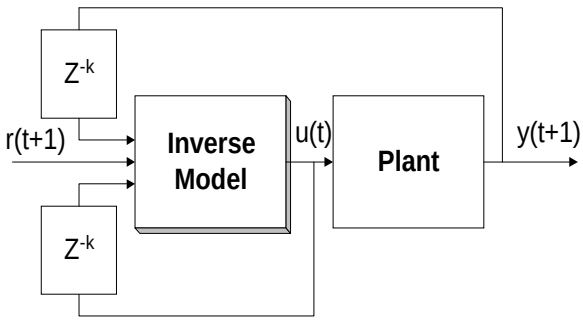

Fig. 10. Structure for direct inverse control. If the inverse model is of order superior to one, delayed samples of control and output are feedback to the inverse model input.

Additive Feedforward Control (AFFC). The principle of additive feedforward control is quite simple: add to an existing (but not satisfactory functioning) feedback controller an additional inverse process controller. The principle of AFFC is illustrated in figure 11.

The additive feedforward control strategy offers the following important advantages [10]:

- Data collecting can be done using the existing closed loop: avoiding plant stopping for data collection and facilitating the access to good quality data.
- There is no need for opening the existing control loop nor during training neither during the introduction of the additive controller.

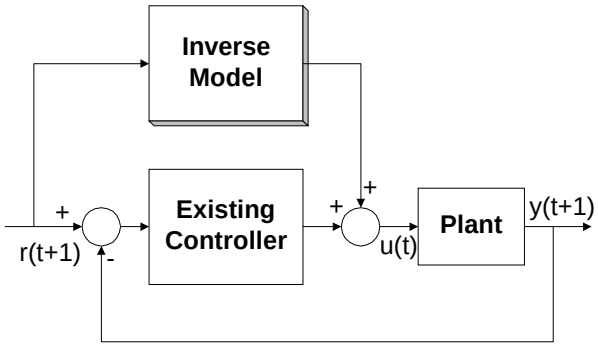

Fig. 11. Structure for additive feedforward control (without detail in the Inverse model input).

5. SATURATION IN THE ACTUATOR

Before testing the controllers directly on the kiln, several simulations were performed using direct and inverse models to emulate the results of the real time control action.

During the simulation phase a new problem arises: though the training and test data for the control signal was limited to the range of 0-4V, due to the capability of generalization of the NNs, the control signal sometimes goes outside this range.

This physical limitation which results in a problem is usually reported as saturation in the actuator [8]. Saturation is quite common in nonlinear systems and can be divided in two types: saturation in the actuator and saturation in the states (of the plant).

The present situation falls on the easier side since NNs can deal with saturation on the actuator quite easily. The controller was then changed to incorporate the mentioned limits and as can be seen in the next section this limitation did not deteriorate the behavior of the system.

6. THE REAL TIME CONTROL ACTION

When the simulation results were considered satisfactory the controllers were tested directly in the kiln.

Direct Inverse Control was the first strategy to be applied. Being almost an open loop solution (the error is not feed back), DIC does not bring robustness and stability that can be obtained with other solutions. It is also known as a solution that generates very active control signals [4].

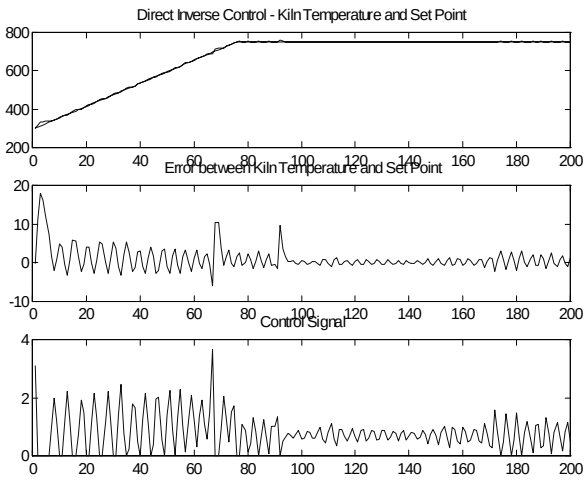

Fig. 12. Kiln temperature control using Direct Inverse Control.

As can be seen in figure 12, DIC produces control of good quality:

- The control signal can be considered active (but not excessively active) when related to the allowed range of 0-4V.
- The error (which is centered on zero and ranges from +3 to –3 degrees) is around 0.5% of the expected final value after the initial rising phase.

The results obtained with AFFC are not very different from the ones obtained with DIC as can be seen from figure 13. Nevertheless the mean square error is smaller than in the first case. The values are presented in table 1. The existing controller was a PI tuned manually.

Mean Square Error	Direct Inverse Control	Additive Feedforward Control
Complete Set	9.67	6.70
After Raising	1.97	1.56

Table 1. Mean Square Error – Comparison between the two strategies.

From the results in table 1 AFFC presents an improvement over DIC of 30.7% when the error on the complete set is evaluated and an improvement of 20.8% when only the error in the zone where the temperature should be stabilized is considered.

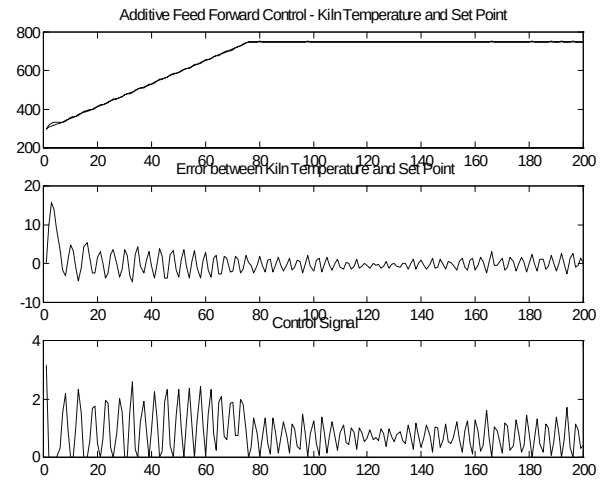

Fig. 13. Kiln temperature control using Additive Feedforward Control.

7. CONCLUSIONS

The behavior of FNNs is not the same when dealing with noisy data:

- Training must be shorter since less accurate information can be extracted from data.
- Higher absolute error should be expected and the final quality of the controller is not the same as without noise.

Filtering and early stopping were used to deal with this problem.

Saturation in the actuator was another problem found and solved through appropriate limitations inserted in the controller implementation.

Direct Inverse Control strategy achieved interesting results, nevertheless AFFC was also tested. The presented results for AFFC are not only significantly better than DIC but bring the important feature of making it easy to enhance existing loops of control.

AFFC was implemented using an existing PI controller tuned manually. The interest here is to show that even with a non-optimized controller AFFC performs better than DIC.

Future work will concern implementing other control strategies such as Internal Model Control and implementing the controller in low cost, low processing microcontrollers.

REFERENCES

[1] Hassibi, B. and D. G. Stork (1993), Second Order Derivatives for Network Pruning: Optimal Brain Surgeon, *Proceedings of NIPS 5,164, San Mateo, California, 164:172.*

[2] Hunt, K.J. and D. Sbarbaro (1991), Neural Networks for linear Internal Model Control, *IEE Proceedings-D, Control theory and applications, 138(5):431-438.*

[3] Le Cun, Y., J.S. Denker, S.A. Solla (1990), Optimal Brain Damage, Advances in Neural Information Processing Systems, Denver 1989, Ed. D.Touretzsky, Morgan Kaufmann, 598*:605.*

[4] Nørgaard, M. (1996)a. System Identification and Control with Neural Networks. *PhD Thesis, Department of Automation, Technical University of Denmark.*

[5] Nørgaard, M. (1996)b. Neural Network System Identification Toolbox for MATLAB, *Technical Report.*

[6] Nørgaard, M. (1996)c. Neural Network Control Toolbox for MATLAB, *Technical Report.*

[7] Pedersen, M. W. and L.K. Hansen (1994), Recurrent Networks: Second Order Properties and Pruning, *Proceedings of Neural Information Processing Systems 7, 673:680.*

[8] Shen, R. T. (1998). Optimal Control of Nonlinear Systems with Neural Networks. *PhD Thesis, Stanford University.*

[9] Sjöberg J. and L. Ljung(1992). Overtraining, Regularization and Searching for minimum in Neural Networks, *Preprint IFAC Symp. on Adaptive Systems in Control and Signal Processing, Grenoble, France, 669:674.*

[10]Sørensen, O. (1994). Neural Networks in Control Applications. *PhD Thesis, Department of Control Engineering, Institute of Electronic Systems, Aalborg University, Denmark.*